POWERS™

HydroGuard® T/P
Series e700

INSTALLATION INSTRUCTIONS

Note: Installation should be in accordance with accepted plumbing practices. Flush all piping thoroughly before installation.

TO INSTALL

1. Position mixer 1-15/16″ ± 1/2″ [49mm ± 13mm] from inlet center to finished wall surface. The tub outlet port is marked “TUB” and should face down. Facing front of mixer, connect hot water to left side and connect cold water to right side. The valve has “C” and “H” cast into the body near the appropriate inlet ports.
2. Valve is factory-set for standard inlets. If **reversed inlets** are required due to back-to-back installation (Cold water supply on the left and Hot water supply on the right), follow instructions a–d below:
   a. Connect **cold inlet** to **hot port** (“H”) and **hot inlet** to **cold port** (“C”). **Note:** Do not turn valve upside down. If valve is upside down, water will not flow properly through tub spout or showerhead.
   b. Turn water off with checkstops, remove bonnet and cartridge.
   c. Reinstall cartridge. “H” on the cold side of the valve body and “C” should be on the hot side of the valve body.
   d. Reinstall bonnet with high temperature limit stop on it.
   Note: Be certain that valve opens in full cold!
   e. Hot and Cold inlets should be re-identified for reversed inlets to avoid confusion during future maintenance.
3. For **tub and shower installations,** see Figure 1. Pipe bottom outlet port “TUB” directly to the diverter tub spout. The mixer body is designed to operate without the use of a twin ell. Pipe top outlet port “S” to the showerhead.
4. For **shower only installation,** see Figure 2. Pipe top outlet port “S” directly to the showerhead and plug bottom port.
5. Rough-in guide installation…
   a. When piping installation is completed and before doing the finished wall, slide rough-in guide onto the mixer stem and press fit into place. (See Figure 4.)
   b. The rough-in guide will insure the proper size opening for mixer and checkstop shut-off and repair accessibility, as well as protect the chrome-plated sleeve from damage during drywall and tile installation.
6. To install dial gaskets, peel backing off gaskets and attach gaskets to inside of dial plate.
6. (a) **For e707**
   Attach indicator plate gasket to the back of the trim plate making sure horizontal holes on the gasket matches horizontal holes on the trim plate. Indicator plate locator hole matches diagonal hole on the trim plate. Peel off backing of the trim plate gasket and attach to the inside top edge of the trim plate. Gasket should be approximately 1/16" beyond the plate edge.
7. (a) **For e705 & e710**
   After wall is completed, remove rough-in guide. Install O-ring on the bonnet. Slide sleeve on the bonnet and attach dial assembly and handle to mixer body with the screws furnished.
7 (b) **For e707**
   1. Install trim plate.
   2. Snap on the indicator plate. Guide on the back of the plate goes into the locator hole.
   3. Install sleeve O-ring on the bonnet. Slide sleeve on the bonnet.

CAUTION: Indicator plate must be installed before sleeve.

   4. Install handle and tighten the setscrew.

CAUTION: When soldering during installation process, do not heat the valve any higher than the temperature required to flow solder. Excessive overheating of the valve may cause damage to the cartridge mechanism. ***By following this recommendation, you will be able to solder the valve without removing either the cartridge or the checkstop internals.*** If either brazing or resistance (electric) solder is to be used, all valve internals must be removed.

8. Maximum temperature setting adjustment (see Figure 5) must be set on the job to in no case greater than 110°F [43°C]. The high temperature limit stop is located on the bonnet. Rotate handle to the maximum desired outlet temperature. With an open-end wrench, screw high temperature limit stop into bonnet until it touches stem’s shoulder. Close valve and open it to full hot to verify settings.

Figure 1: Rough-in Dimensions — Tub and Shower

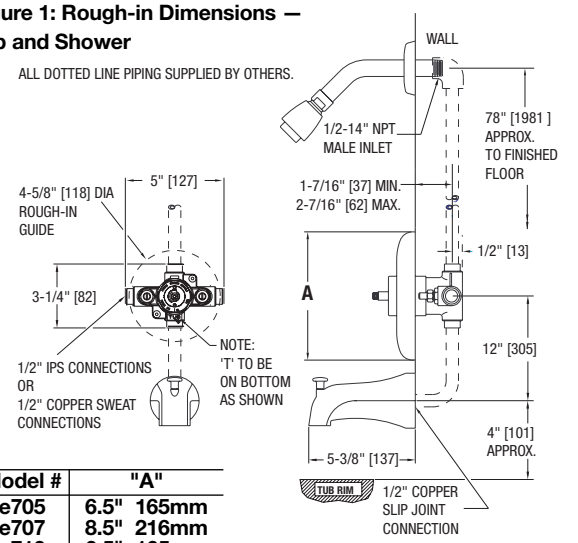

Model #	"A"
e705	6.5" 165mm
e707	8.5" 216mm
e710	6.5" 165mm

Figure 2: Rough-in Dimensions — Shower only

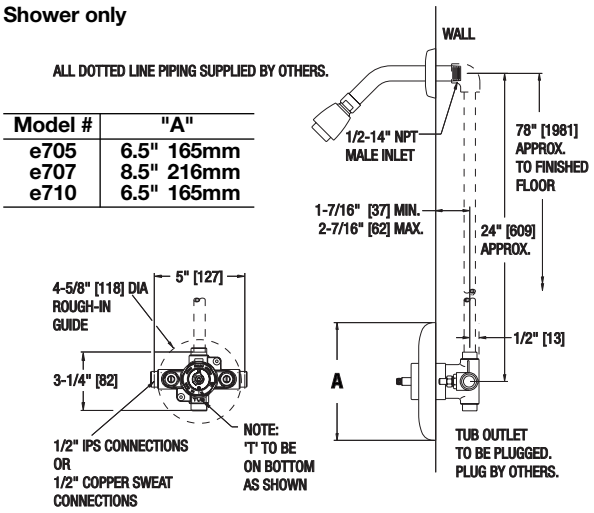

Model #	"A"
e705	6.5" 165mm
e707	8.5" 216mm
e710	6.5" 165mm

Dimensions in inches [millimeters]

Figure 3

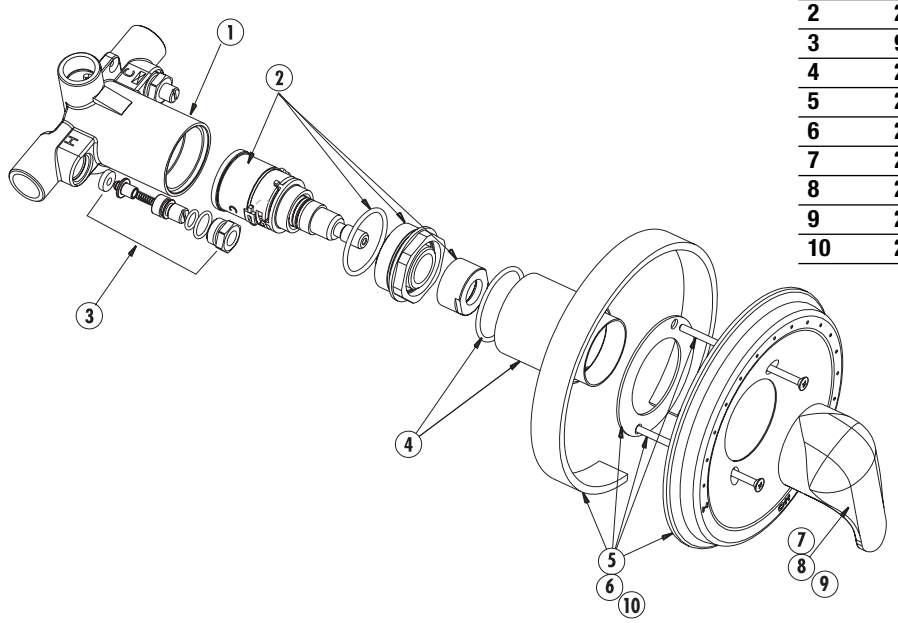

ITEM#	KIT#	DESCRIPTION
1	N/A	Valve Body
2	220 060	Cartridge Kit
3	900 050	Checkstop Replacement Kit
4	220 054	Sleeve Kit
5	220 051	Metal Trim Plate Kit
6	220 053	ABS Trim Plate Kit
7	220 050	Metal Handle Kit
8	220 052	ABS Handle Kit
9	220 079	Dome Metal Handle Kit
10	220 078	Metal Flat Trim Plate Kit

Figure 4: Rough-In Guide

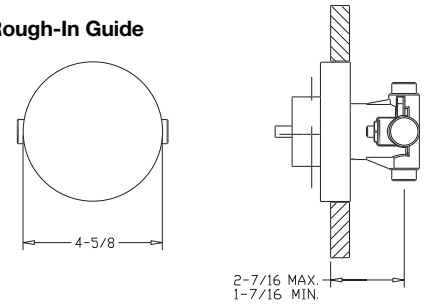

Figure 5: Max. Temperature Setting

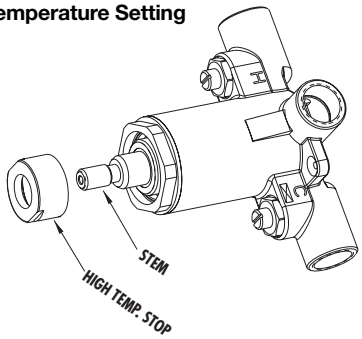

TROUBLESHOOTING

Description	Troubleshooting	Repair Kit No.
Cartridge Kit	• Water leaks at valve stem and/or bonnet. • Water leaks at valve shutoff. • Water temperaure changes during shower.	220 060
Checkstop Replacement Kit	• Checkstop leaks or will not shut off completely.	900 050

CALIFORNIA PROPOSITION 65 WARNING

WARNING: This product contains chemicals known to the State of California to cause cancer and birth defects or other reproductive harm. (California law requires this warning to be given to customers in the State of California.)

For more information: www.watts.com/prop65

POWERS™
a division of Watts Water Technologies, Inc.

© 2006 Powers

USA: Phone: 1.800.669.5430 • Fax 1.847.229.0526 • www.powerscontrols.com
Canada: Phone: 1.888.208.8927 • Fax 1.888.882.1979 • www.powerscontrols.ca